MON-421 Series Vibration Sensor

M12 Connector, Dual Output - 4-20mA and AC

Typical Applications

- Low cost online means of monitoring with the capability of interfacing direct into PLC, BMS or any 4-20mA input module.
  Proven use in vibration monitoring for offline applications using commercially available data collectors.

- **Protecting...**
  Fans, Motors, Pumps, Compressors, Centrifuges, Conveyers, Air Handlers, Gearboxes, Rolls, Dryers, Presses, Cooling, HVAC, Spindles, Machine Tooling, Process Equipment and many more.

PRODUCT DATA

Technical Performance

Mounted Base Resonance	5 kHz min.
Velocity Ranges	0-10 to 0-100 mm/sec RMS (5 ranges)
Frequency Response	10 Hz to 1 kHz ±5 % - ISO10816
Isolation	Base isolated
Measurement Range	50 g peak
Transverse Sensitivity	Less than 5%

Electrical

Output Current	4-20 mA DC proportional to RMS velocity (mm/s) and AC g for data collectors
Supply Voltage	15 - 30 Volts DC (for 4-20 mA)
Settling Time	2 seconds
Output Impedance	Loop Resistance 600 Ohms max. at 24 Volts
Case Isolation	$>10^8$ Ohms at 500 Volts

Environmental

Operating Temperature Range	-25 to 90 ºC
Sealing	IP67
Maximum Shock	5000 g
Emissions	EN61000-6-4:2001
Immunity	EN61000-6-2:1999

Mechanical

Case Material	Stainless Steel
Sensing Element/Construction	PZT/Compression
Mounting Torque	8 Nm
Weight	150 gms (nom)
Maximum Cable length	1000 metres
Mating Connector / Cable Assembly	M12 - Straight or Right Angle. Requires screened cable assembly
Mounting Threads	See 'How to order' table
Options	Ranges, connector, other cable lengths

MONITION LTD
Condition Monitoring
& Plant Reliability Services

Tel: +44(0) 1909 722000
Fax: +44(0) 1909 722208
Email: sales@monition.com
Web: www.monition.com

MON-421 Series Vibration Sensor

Dimensions

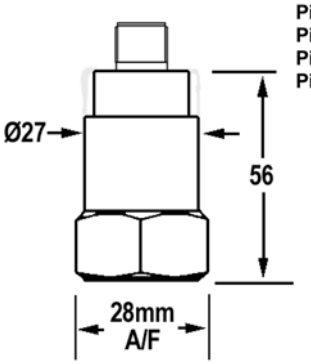

Pin 1 - AC (brown)
Pin 2 - Supply (white)
Pin 3 - No connection
Pin 4 - 0V (black)

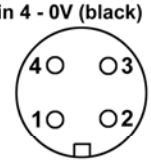

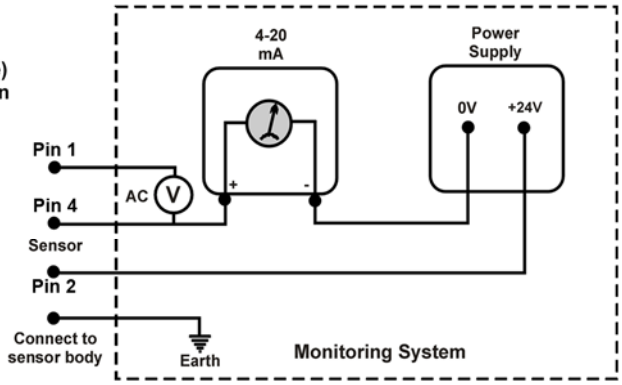

Frequency Response

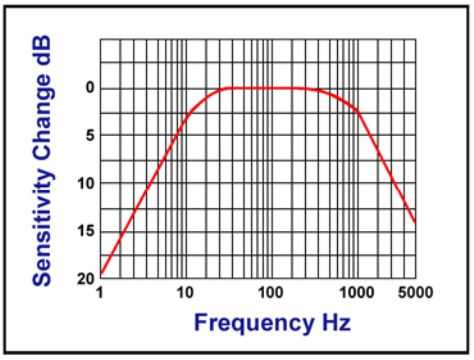

Mounting of sensor to achieve good repeatable readings.
Vibration sensor should be firmly fixed to a flat surface (spot face surface may be needed to be produced and cable anchored to sensor body.)

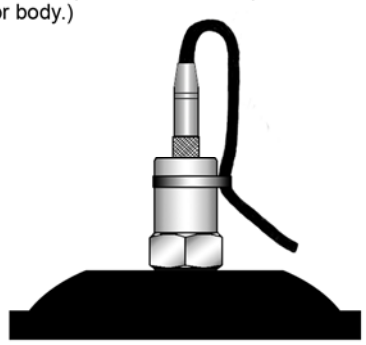

How to order

4	2	X	F	X	X	X	5	4	0	5

Extra Options
F - Filtered

Product Series
420 - 4-20mA Velocity Output (mm/s)
421 - 4-20mA Velocity (mm/s) and AC Output
422 - 4-20mA Acceleration ('g' RMS)

For 420 Series & 421 Series VELOCITY RANGE	For 421 Series only AC (SENSITIVITY)
010 ... 0-10 mmsec RMS	100 mV/g
020 ... 0-20 mm/sec RMS	100 mV/g
025 ... 0-25 mm/sec RMS	100 mV/g
050 ... 0-50 mm/sec RMS	50 mV/g
100 ... 0-100 mm/sec RMS	50 mV/g

For 422 Series
ACCELERATION RANGE
001 ... 0-1 g RMS
002 ... 0-2 g RMS
005 ... 0-5 g RMS
010 ... 0-10 g RMS
100 ... 0-100 g RMS

Cable
03 ... 3 core O/B ETFE
07 ... Blue Silicon Screened
Connector
51 ... 3 Pin 62GB
52 ... 3 Pin MS
54 ... M12

Mounting Threads
01 ... ¼"-28 UNF Female
02 ... ¼"-28 UNF Male
05 ... Quick Fit Female
06 ... M6 x 1mm Male
08 ... M8 x 1.25mm Male
10 ... M10 x 1.5mm Male
12 ... M12 x 1.75mm Male

Please contact our Sales Office for information on sensor accessories (mounting studs, etc) and multichannel switch boxes.

We reserve the right to alter the specification of this product without prior notice.

MONITION LTD
Condition Monitoring
& Plant Reliability Services

Tel: +44(0) 1909 722000
Fax: +44(0) 1909 722208
Email: sales@monition.com
Web: www.monition.com